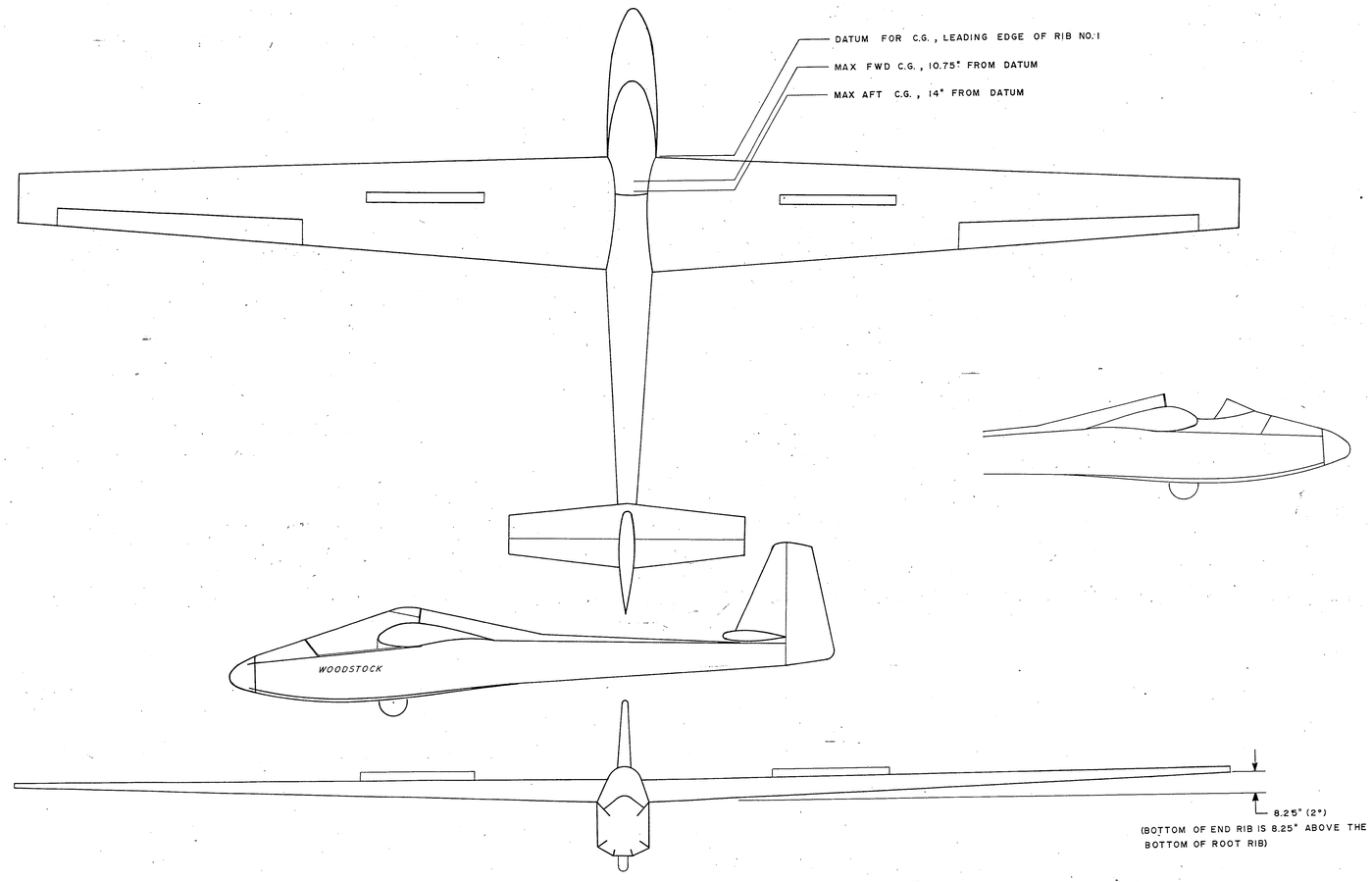

STUDY THE PLANS AND THE BOOK CAREFULLY BEFORE YOU START TO BUILD
It's better and quicker than having to make the part over again.

NO DESIGN CHANGES WILL BE APPROVED

Wood

1. All structural wood is Douglas fir.
   Maximum grain slope 1:15
   Minimum angular rings 8/inch
   Vertical grain. Note: Maximum grain angle at wing attach hardware:

2. Fuselage longerons: Spruce is adequate and easier to shape.
3. Scarf joints minimum 1:10

Plywood

1. Fuselage frames, ribs, intercostals, keel, all marine grade "A A" Douglas fir plywood. Thickness as shown on the plans.
2. Wing spar webs and fuselage skin 3/32" aircraft mahogany, or 2 mm aircraft birch ply.
3. Fin, stabilizer, rudder, elevator and turtle deck 1 mm birch.
4. Aileron skins .8mm birch.
5. Wing "D" tube 1.5 mm birch.
6. Scarf joints 1:10 Scuff all glue surfaces with 120 grit sandpaper.
7. Rub birch glue areas with rag dampened with lacquer thinner. Use only epoxy glue on birch.
8. Remove all fasteners (staples, brads, nails, etc.)

Metal

1. Welding should be done by qualified aircraft welder.
2. All steel is 4130 normalized condition unless otherwise noted.
3. Remove all toolmarks from metal.
4. Do not file welds.
5. Paint or cad plate steel hardware.

Information

1. Abbreviations:
   Typ - typical
   Ref - reference
   Shn - shown
   Sht - sheet
   2" - 2 inches
   C.G. - Center of gravity
2. Take care of your drawings. Direct sunlight will fade the prints.
3. Prints may be re-ordered. Sheet 1 - $10.00 (and a good reason!)
   Sheets 2 - 14, $5.00 each
4. GLUE: USE ONLY WATERPROOF GLUE, HUGHES FLP-16A IS RECOMMENDED

These drawings, related manuals and other material are furnished for educational purposes only, to show typical construction of a wooden glider. No warranty, either express or implied, is made by Jim Maupin as to the air-worthiness of an aircraft constructed from these plans, or as to the accuracy of the printing thereof, or that these plans will incorporate all the requirements of any duly constituted authority regarding gliders.

In accepting and using these plans and specifications, the user thereof assumes all risks and liabilities whatsoever incident to the construction and use of a glider designed herein, and warrants that he shall hold the designer harmless from any and all claims of others who may be, or claim to be, damaged in any manner whatsoever by the glider designed herein.

Possession of these prints does not constitute the right to manufacture a Woodstock glider. _____ has paid for the right to construct only one glider from this set of prints, serial number ____, and has agreed not to loan, copy or resell any of these prints or copies thereof. An additional payment of $65.00 must be made for each and every additional glider or part thereof built from these plans.

JIM MAUPIN

WOODSTOCK

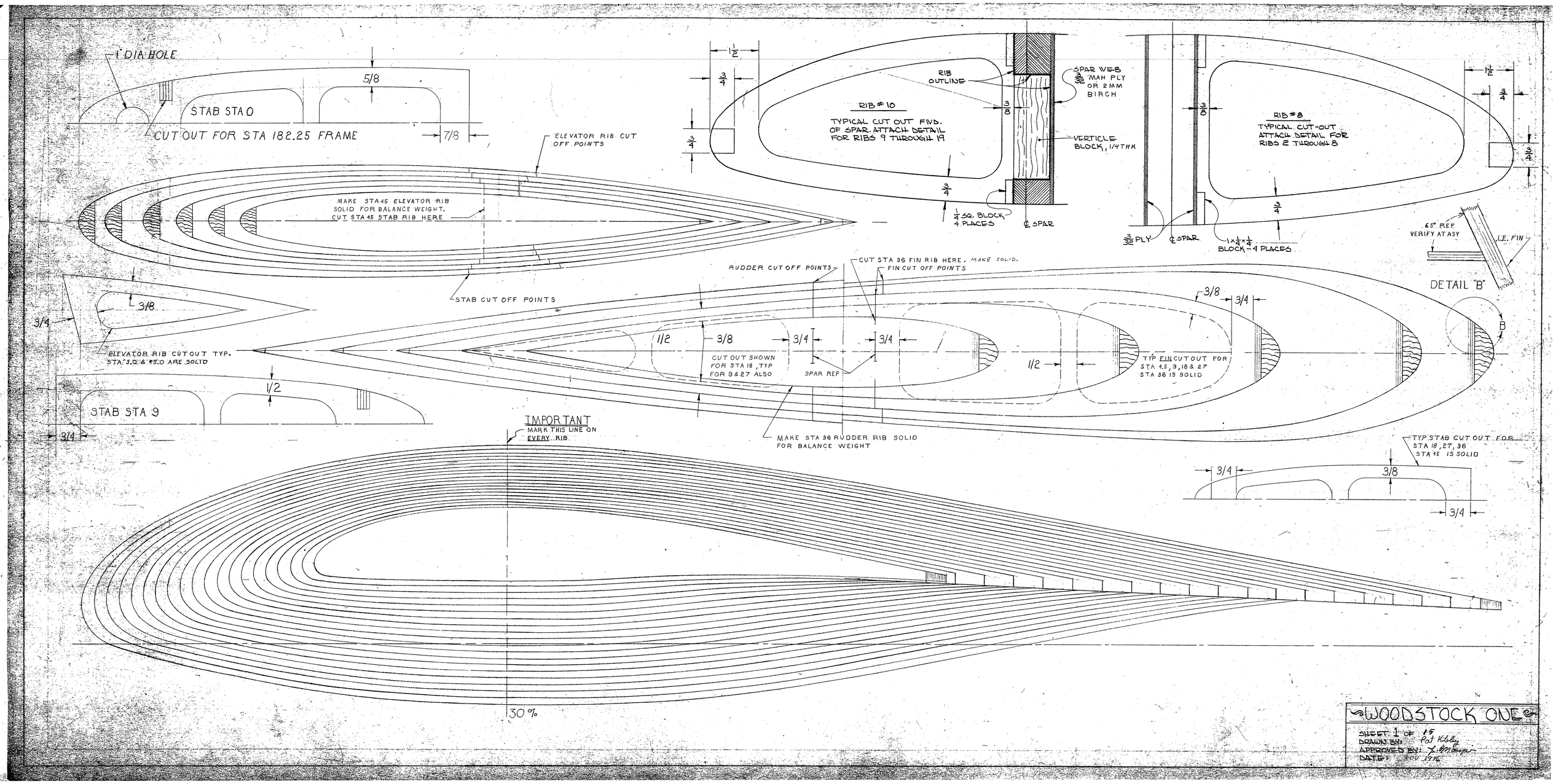

WOODSTOCK ONE

SHEET 1 OF 15
DRAWN BY: Pat Kirby
APPROVED BY: L. McCaupin
DATE: NOV 1976

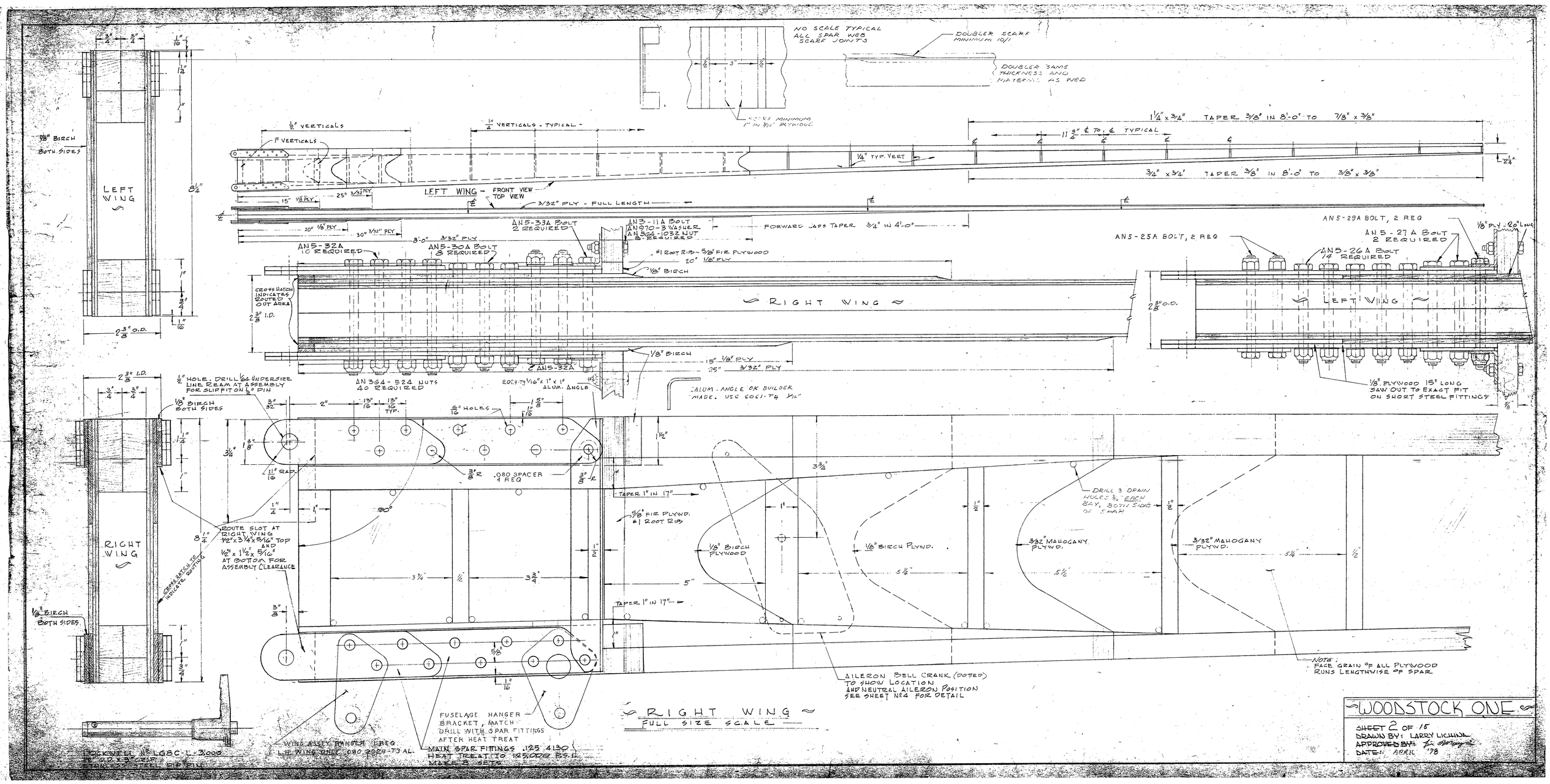
NO SCALE TYPICAL
ALL SPAR WEB SCARF JOINTS
DOUBLER SCARF MINIMUM 10/1
DOUBLER SAME THICKNESS AND MATERIAL AS WEB
SCARF MINIMUM 1" IN 4/1" PLYWOOD
1/8" BIRCH BOTH SIDES
LEFT WING
1/2" VERTICALS
1" VERTICALS
1/4" VERTICALS - TYPICAL -
1 1/4" x 3/4" TAPER 3/8" IN 8'-0" TO 7/8" x 3/8"
11 3/4" ℄ TO ℄ TYPICAL
1/4" TYP. VERT
3/4" x 3/4" TAPER 3/8" IN 8'-0" TO 3/8" x 3/8"
LEFT WING - FRONT VIEW
TOP VIEW
3/32" PLY - FULL LENGTH
AN5-33A BOLT 2 REQUIRED
AN3-11A BOLT
AN970-3 WASHER
AN364-1032 NUT
8 REQUIRED
FORWARD LAPS TAPER 3/4" IN 4'-0"
AN5-32A 10 REQUIRED
AN5-30A BOLT 8 REQUIRED
#1 ROOT RIB - 5/8" FIR PLYWOOD
1/8" BIRCH
CROSS HATCH INDICATES ROUTED OUT AREA
RIGHT WING
AN364-524 NUTS 40 REQUIRED
20CT-T3 1/16" x 1" x 1" ALUM. ANGLE
ALUM. ANGLE OR BUILDER MADE. USE 6061-T4 1/16"
AN5-25A BOLT, 2 REQ
AN5-29A BOLT, 2 REQ
AN5-27A BOLT 2 REQUIRED
AN5-26A BOLT 14 REQUIRED
1/8" PLY - 20" LONG
1/8" PLYWOOD 15" LONG SAW OUT TO EXACT FIT ON SHORT STEEL FITTINGS
1/2" HOLE, DRILL 1/64 UNDERSIZE LINE REAM AT ASSEMBLY FOR SLIP FIT ON 1/2" PIN
5/16" HOLES
.080 SPACER 4 REQ
TAPER 1" IN 17"
5/8" FIR PLYWD. #1 ROOT RIB
ROUTE SLOT AT RIGHT WING 1/2" x 3 1/4" x 5/16" TOP AND 1/2" x 1 1/2" x 5/16" AT BOTTOM FOR ASSEMBLY CLEARANCE
CROSS HATCH TO INDICATE ROUTING
1/8" BIRCH PLYWOOD
1/8" BIRCH PLYWD.
3/32" MAHOGANY PLYWD.
DRILL 3 DRAIN HOLES 3/8" EACH BAY, BOTH SIDES OF SPAR
AILERON BELL CRANK (DOTTED) TO SHOW LOCATION AND NEUTRAL AILERON POSITION SEE SHEET No 4 FOR DETAIL
NOTE: FACE GRAIN OF ALL PLYWOOD RUNS LENGTHWISE OF SPAR
FUSELAGE HANGER BRACKET, MATCH DRILL WITH SPAR FITTINGS AFTER HEAT TREAT
WING ASSY. RANGER 1 REQ
L.H. WING ONLY .080 2024-T3 AL.
MAIN SPAR FITTINGS .125 4130
HEAT TREAT TO 125000 P.S.I.
MAKE 3 SETS
ROCKWELL No LG8C-L-3000
RIGHT WING
FULL SIZE SCALE
WOODSTOCK ONE
SHEET 2 OF 15
DRAWN BY: LARRY LICHINA
APPROVED BY:
DATE: APRIL '78

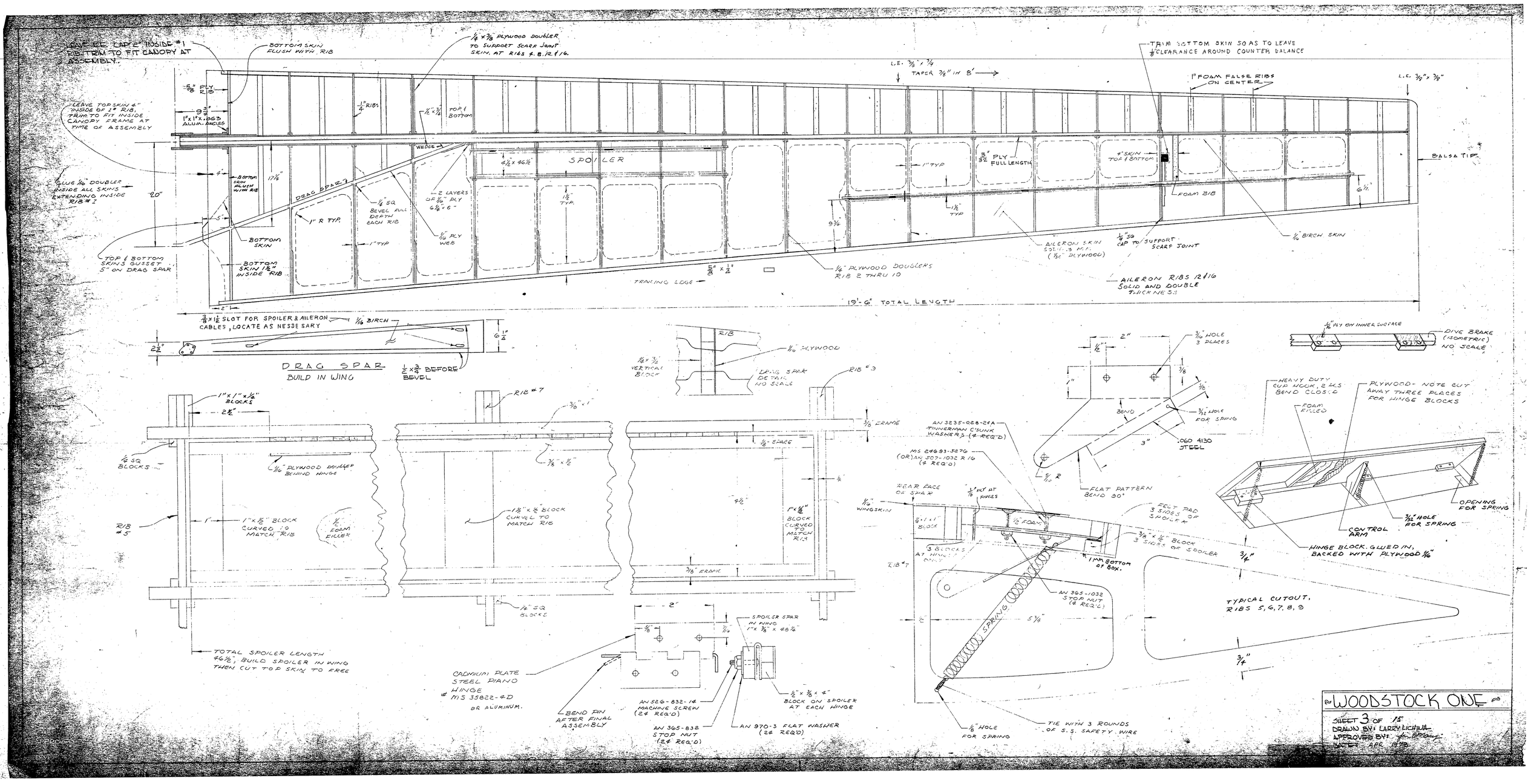
LEAVE L.E. CAP 2" INSIDE #1 RIB. TRIM TO FIT CANOPY AT ASSEMBLY.
BOTTOM SKIN FLUSH WITH RIB
1/4 x 3/8 PLYWOOD DOUBLER TO SUPPORT SCARF JOINT SKIN, AT RIBS 4, 8, 12 & 16.
TRIM BOTTOM SKIN SO AS TO LEAVE 1/8 CLEARANCE AROUND COUNTER BALANCE
L.E. 3/8" x 3/4 TAPER 3/8" IN 8'
1" FOAM FALSE RIBS ON CENTER
L.E. 3/8" x 3/8"
5/8 PLY RIB
LEAVE TOP SKIN 6" INSIDE OF 1" RIB. TRIM TO FIT INSIDE CANOPY FRAME AT TIME OF ASSEMBLY
9 3/4"
1" x 1" x .063 ALUM. ANGLES
1/4" RIBS
1/2 x 3/8 TOP & BOTTOM
WEDGE
SPOILER
6 1/2 x 46 1/2
1" TYP
3/32" PLY FULL LENGTH
4" SKIN TOP & BOTTOM
BALSA TIP
GLUE 1/16" DOUBLER INSIDE ALL SKINS EXTENDING INSIDE RIB #1
20"
4"
BOTTOM SKIN FLUSH WITH RIB
12 1/4"
DRAG SPAR
1/4" SQ BEVEL FULL DEPTH EACH RIB
2 LAYERS OF 1/16" PLY 6 1/4" x 6"
1 1/8" TYP.
1/8" PLY WEB
1" R TYP.
1" TYP
1 1/8" TYP
9 3/4"
FOAM RIB
6 1/2"
5"
BOTTOM SKIN
TOP & BOTTOM SKINS GUSSET 5" ON DRAG SPAR
BOTTOM SKIN 1/8" INSIDE RIB
5/8" x 1/4"
TRAILING EDGE
1/16" PLYWOOD DOUBLERS RIB 2 THRU 10
AILERON SKIN 5052-H34 (1/16" PLYWOOD)
1/4" SQ CAP TO SUPPORT SCARF JOINT
1/16" BIRCH SKIN
AILERON RIBS 12 & 16 SOLID AND DOUBLE THICKNESS
2"
19'-6" TOTAL LENGTH
3/8 x 1/2 SLOT FOR SPOILER & AILERON CABLES, LOCATE AS NESSESARY
1/16 BIRCH
2 1/2"
6 1/4"
DRAG SPAR
BUILD IN WING
1/2 x 3/8 BEFORE BEVEL
RIB
1/16" PLYWOOD
1/4 x 3/8 VERTICAL BLOCK
DRAG SPAR DETAIL NO SCALE
RIB #3
1/8" PLY ON INNER SURFACE
DIVE BRAKE (ISOMETRIC) NO SCALE
2"
1/2"
3/16" HOLE 3 PLACES
3/8
1"
3/8
BEND
3/32" HOLE FOR SPRING
3"
.060 4130 STEEL
3/16 R
FLAT PATTERN BEND 90°
HEAVY DUTY CUP HOOK, 2 PLS BEND CLOSED
PLYWOOD- NOTE CUT AWAY THREE PLACES FOR HINGE BLOCKS
FOAM FILLED
OPENING FOR SPRING
3/32" HOLE FOR SPRING
CONTROL ARM
HINGE BLOCK. GLUED IN, BACKED WITH PLYWOOD 1/16"
3/4"
1" x 1" x 1/4" BLOCKS
2 1/2"
1/4 SQ BLOCKS
1/16" PLYWOOD DOUBLER BEHIND HINGE
RIB #5
1"
1" x 1/2" BLOCK CURVED TO MATCH RIB
1/2 FOAM FILLER
RIB #7
3/16" x 1"
7/8" x 1/2"
1 1/2" x 1/2" BLOCK CURVED TO MATCH RIB
1/4 SQ BLOCKS
3/8 FRAME
1/8" SPACE
4 1/2"
1" x 1/2" BLOCK CURVED TO MATCH RIB
3/8 FRAME
TOTAL SPOILER LENGTH 46 1/8", BUILD SPOILER IN WING THEN CUT TOP SKIN TO FREE
2"
5/8
7/16
SPOILER SPAR IN WING 1" x 3/8" x 48 1/2"
CADMIUM PLATE STEEL PIANO HINGE # MS 35822-4D OR ALUMINUM.
BEND PIN AFTER FINAL ASSEMBLY
AN 526-832-14 MACHINE SCREW (24 REQ'D)
AN 365-832 STOP NUT (24 REQ'D)
AN 970-3 FLAT WASHER (24 REQ'D)
1/2" x 3/8" x 4" BLOCK ON SPOILER AT EACH HINGE
AN 3235-028-24A TINNERMAN C'SUNK WASHERS (4 REQ'D)
MS 24693-3276 (OR) AN 507-1032 R 16 (4 REQ'D)
REAR FACE OF SPAR
1/8" PLY AT HINGES
1/8" WINGSKIN
1/8" x 1" BLOCK
1/8" FOAM
FELT PAD 3 SIDES OF SPOILER
3/8" x 1/2" BLOCK 3 SIDES OF SPOILER
3 BLOCKS AT HINGE ONLY
RIB #7
1" MIN BOTTOM OF BOX.
AN 365-1032 STOP NUT (2 REQ'D)
SPRING
1/2"
5 1/4"
1/8" HOLE FOR SPRING
TIE WITH 3 ROUNDS OF S.S. SAFETY WIRE
TYPICAL CUTOUT, RIBS 5, 6, 7, 8, 9
3/4"
WOODSTOCK ONE
SHEET 3 OF 15
DRAWN BY: LARRY LICHNA
APPROVED BY:
DATE: APR. 1979

~WOODSTOCK ONE~

SHEET 4 OF 15
DRAWN BY: LARRY LICHINA
APPROVED BY:
DATE: JUNE 1998

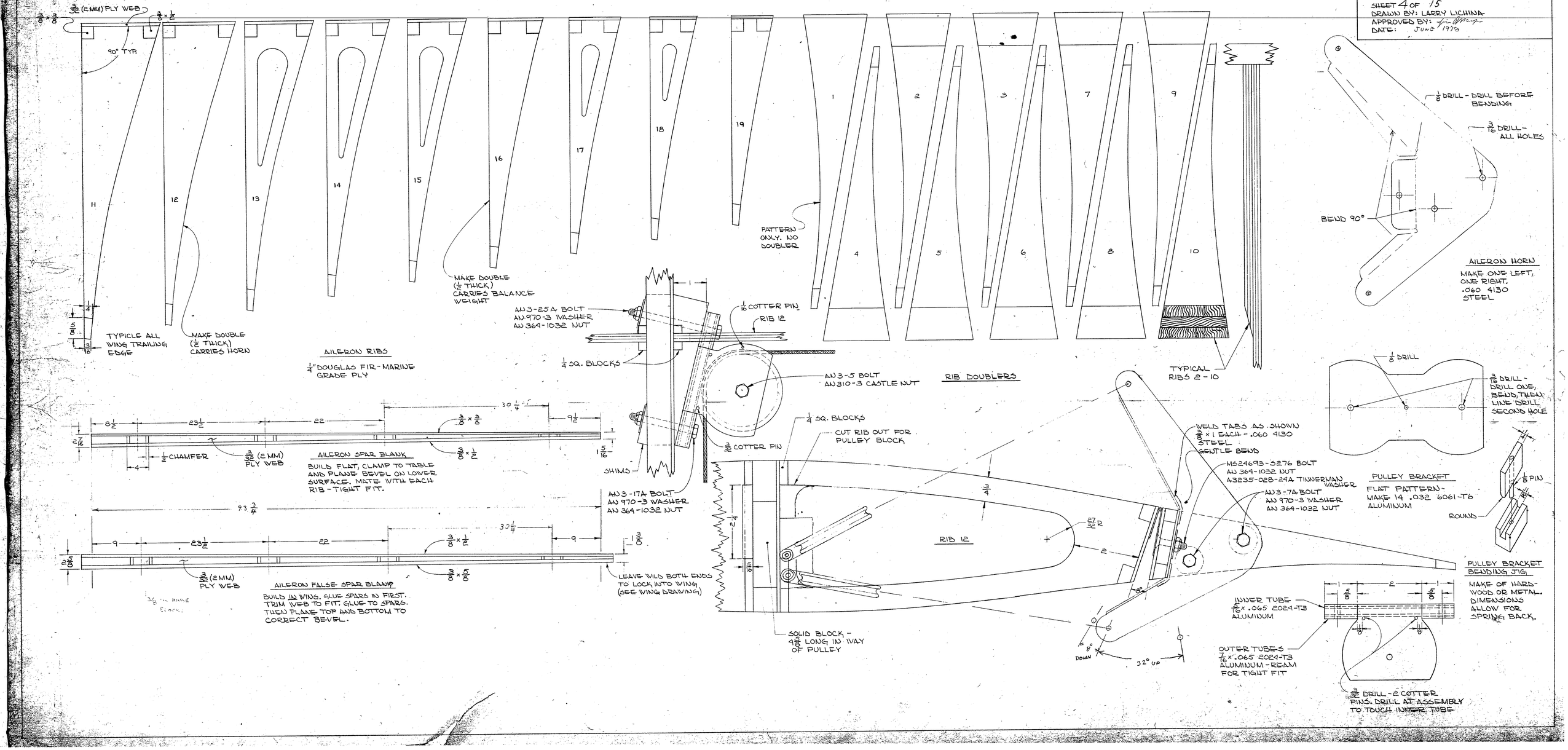

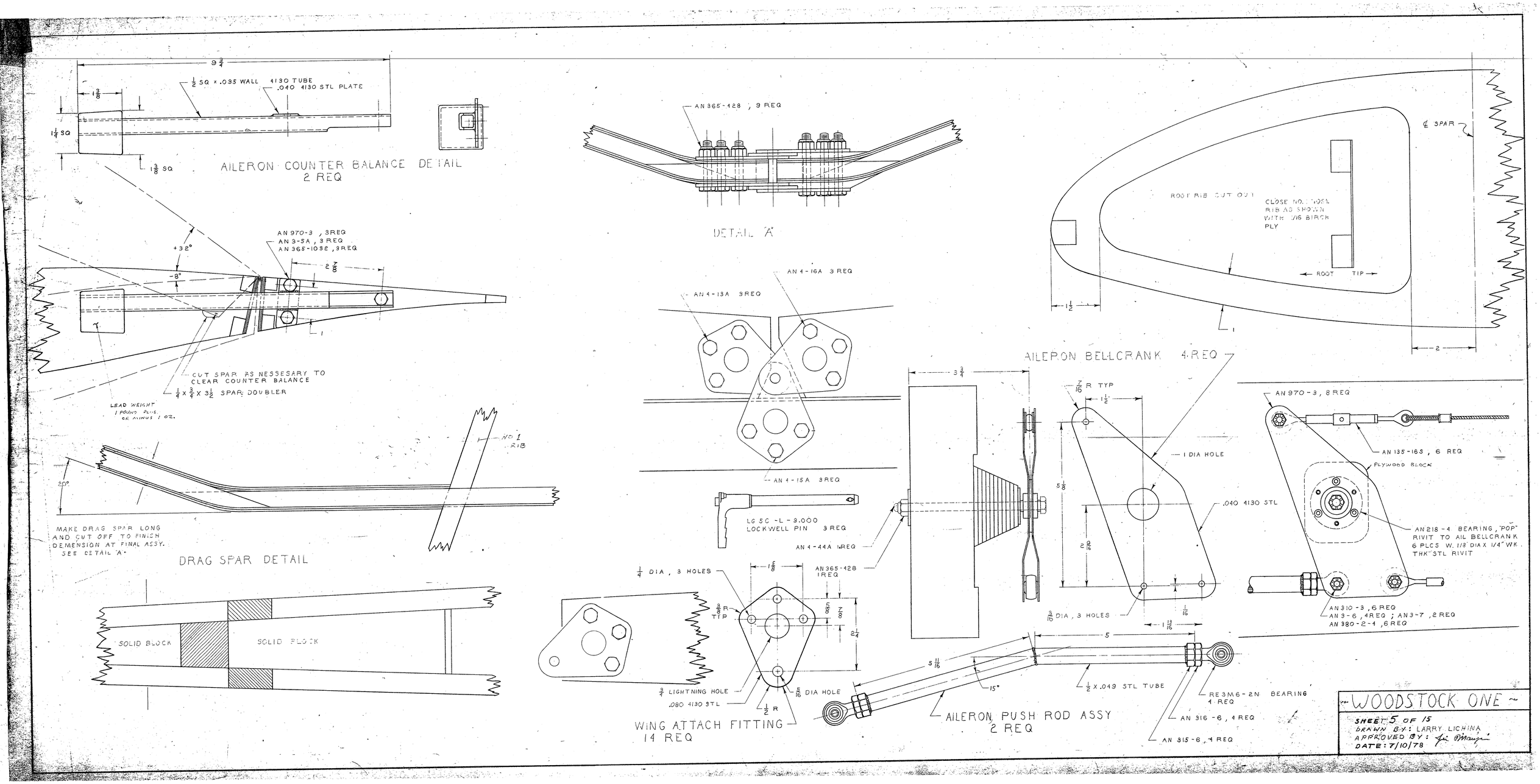

WOODSTOCK ONE

SHEET 5 OF 15
DRAWN BY: LARRY LICHINA
APPROVED BY: [illegible]
DATE: 7/10/78

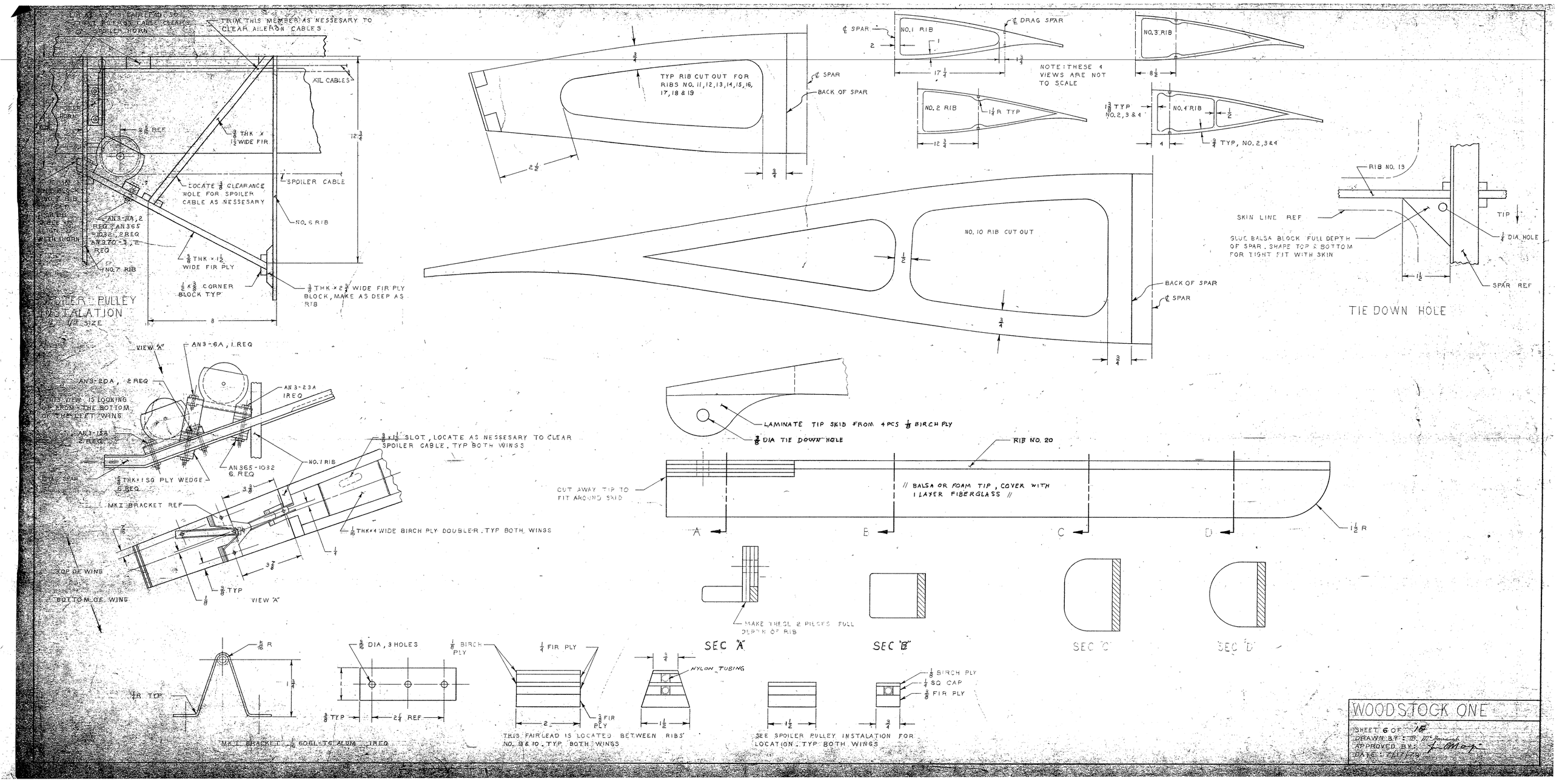

WOODSTOCK ONE

SHEET 6 OF 15
DRAWN BY: T.B. McGonagh
APPROVED BY: L. Mayo
DATE: 11/1/70

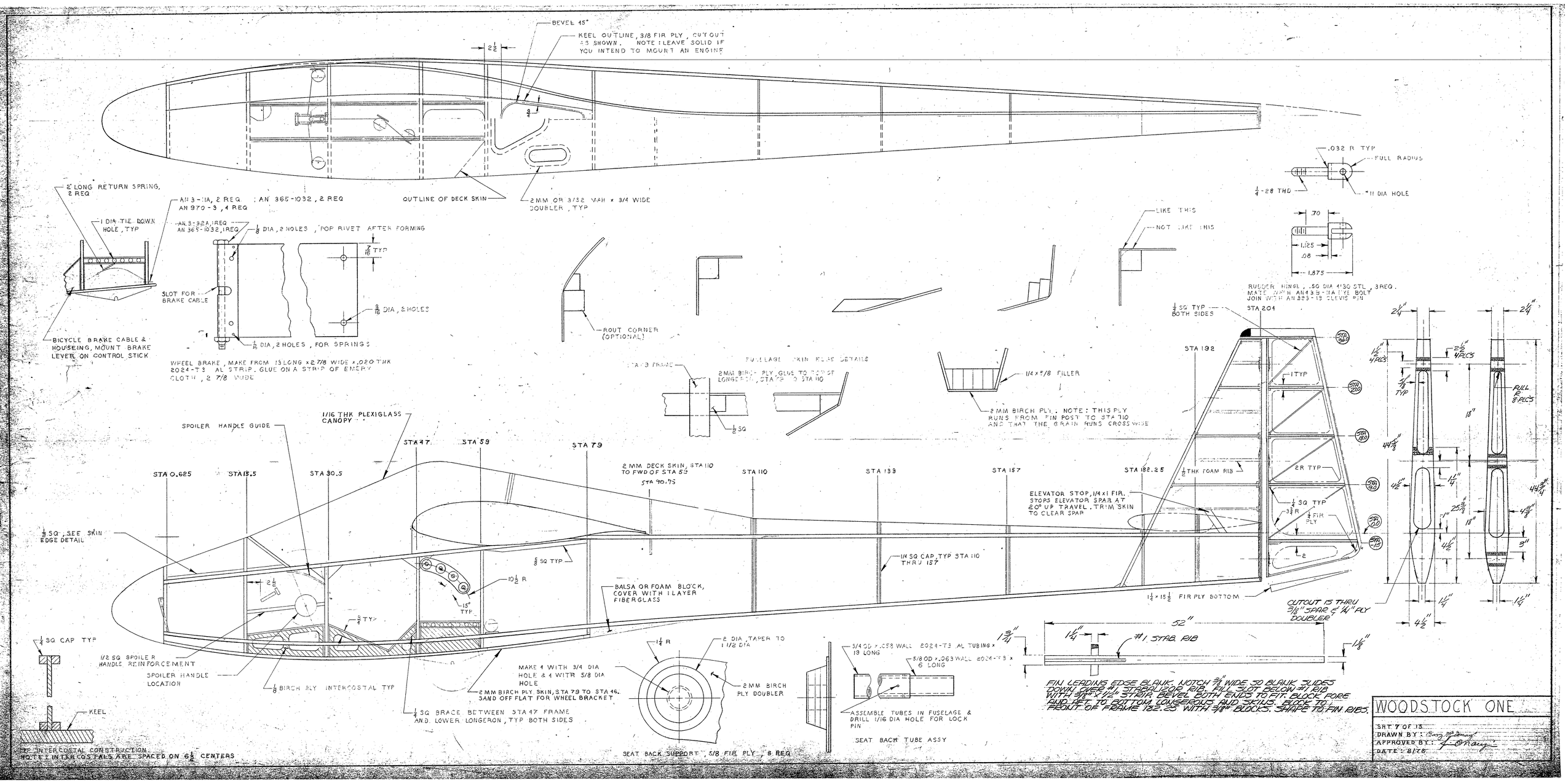
BEVEL 45°
KEEL OUTLINE, 3/8 FIR PLY, CUT OUT AS SHOWN. NOTE: LEAVE SOLID IF YOU INTEND TO MOUNT AN ENGINE
OUTLINE OF DECK SKIN
2 MM OR 3/32 WAH x 3/4 WIDE DOUBLER, TYP
2" LONG RETURN SPRING, 2 REQ
AN 3-11A, 2 REQ ; AN 365-1032, 2 REQ
AN 970-3, 4 REQ
1 DIA TIE DOWN HOLE, TYP
AN 3-32A, 1 REQ
AN 365-1032, 1 REQ
1/8 DIA, 2 HOLES, POP RIVET AFTER FORMING
7/16 TYP
SLOT FOR BRAKE CABLE
3/16 DIA, 2 HOLES
1/16 DIA, 2 HOLES, FOR SPRINGS
BICYCLE BRAKE CABLE & HOUSEING, MOUNT BRAKE LEVER ON CONTROL STICK
WHEEL BRAKE, MAKE FROM 15 LONG x 2 7/8 WIDE x .020 THK 2024-T3 AL STRIP. GLUE ON A STRIP OF EMERY CLOTH, 2 7/8 WIDE
ROUT CORNER (OPTIONAL)
LIKE THIS
NOT LIKE THIS
.032 R TYP
FULL RADIUS
1/4-28 THD
11/16 DIA HOLE
.70
1.125
.08
1.875
RUDDER HINGE, .50 DIA 4130 STL, 3 REQ. MATE WITH AN 3-11A 1/4 BOLT JOIN WITH AN 365-19 CLEVIS PIN
1/2 SQ TYP BOTH SIDES
STA 204
STA 192
STA 210
STA 180
STA 150
STA 120
STA 90
STA 60
STA 30
1 TYP
2 R TYP
1/2 SQ TYP
3 3/4 R
1/2 FIR PLY
2
1/2 THK FOAM RIB
2 1/4"
1 5/8" 4 PLCS
2 1/2" 4 PLCS
7/8 TYP
PULL 2 8 PLCS
18"
44 3/8"
1 1/4"
4 1/2"
25 3/8"
7"
18"
4 1/2"
5"
44 3/4"
4 7/8"
1 1/4"
4 1/2"
1 1/4"
1 1/4"
STAB FRAME
1/2 SQ
FUSELAGE SKIN FILLER DETAILS
8 MM BIRCH PLY, GLUE TO TOP OF LONGERON, STA 90 TO STA 110
1/4 x 5/8 FILLER
8 MM BIRCH PLY. NOTE: THIS PLY RUNS FROM FIN POST TO STA 110 AND THAT THE GRAIN RUNS CROSS WISE
1/16 THK PLEXIGLASS CANOPY
SPOILER HANDLE GUIDE
STA 0.625
STA 15.5
STA 30.5
STA 47
STA 59
STA 79
8 MM DECK SKIN, STA 110 TO FWD OF STA 59
STA 90.75
STA 110
STA 133
STA 157
STA 182.25
ELEVATOR STOP, 1/4 x 1 FIR. STOPS ELEVATOR SPAR AT 20° UP TRAVEL. TRIM SKIN TO CLEAR SPAR
1/2 SQ, SEE SKIN EDGE DETAIL
1/8 SQ TYP
10 1/2 R
15° TYP
1/4 SQ TYP
BALSA OR FOAM BLOCK, COVER WITH 1 LAYER FIBERGLASS
1/4 SQ CAP TYP STA 110 THRU 157
1 1/2 x 15 1/2 FIR PLY BOTTOM
CUTOUT IS THRU 3/16" SPAR & 1/4" PLY DOUBLER
3/4 TYP
1/4 SQ CAP TYP
1/2 SQ SPOILER HANDLE REINFORCEMENT
SPOILER HANDLE LOCATION
1/8 BIRCH PLY INTERCOSTAL TYP
KEEL
TYP INTERCOSTAL CONSTRUCTION
NOTE: INTERCOSTALS ARE SPACED ON 6 1/2 CENTERS
2 MM BIRCH PLY SKIN, STA 79 TO STA 46. SAND OFF FLAT FOR WHEEL BRACKET
1/4 SQ BRACE BETWEEN STA 47 FRAME AND LOWER LONGERON, TYP BOTH SIDES
MAKE 4 WITH 3/4 DIA HOLE & 4 WITH 5/8 DIA HOLE
1 1/4 R
2 DIA, TAPER TO 1 1/2 DIA
2 MM BIRCH PLY DOUBLER
SEAT BACK SUPPORT, 5/8 FIR PLY, 8 REQ
5/4 OD x .058 WALL 2024-T3 AL TUBING x 19 LONG
5/8 OD x .063 WALL 2024-T3 x 6 LONG
ASSEMBLE TUBES IN FUSELAGE & DRILL 1/16 DIA HOLE FOR LOCK PIN
SEAT BACK TUBE ASSY
52"
1 3/4"
1 1/4"
#1 STAB. RIB
1 1/8"
FIN LEADING EDGE BLANK NOTCH 3/8" WIDE 30 BLANK SLIDES DOWN OVER #1 STABILIZER RIB. PLY SLOT BELOW #1 RIB WITH 3/4" x 1/2" STBR. BEVEL BOTH ENDS TO FIT BLOCK FORE AND AFT TO BOTTOM LONGERONS AND SKINS. BLOCK TO FRONT OF FRAME 182.25 WITH 3/4" BLOCKS. SHAPE TO FIN RIBS.
WOODSTOCK ONE
SHT 7 OF 15
DRAWN BY:
APPROVED BY:
DATE: 8/78

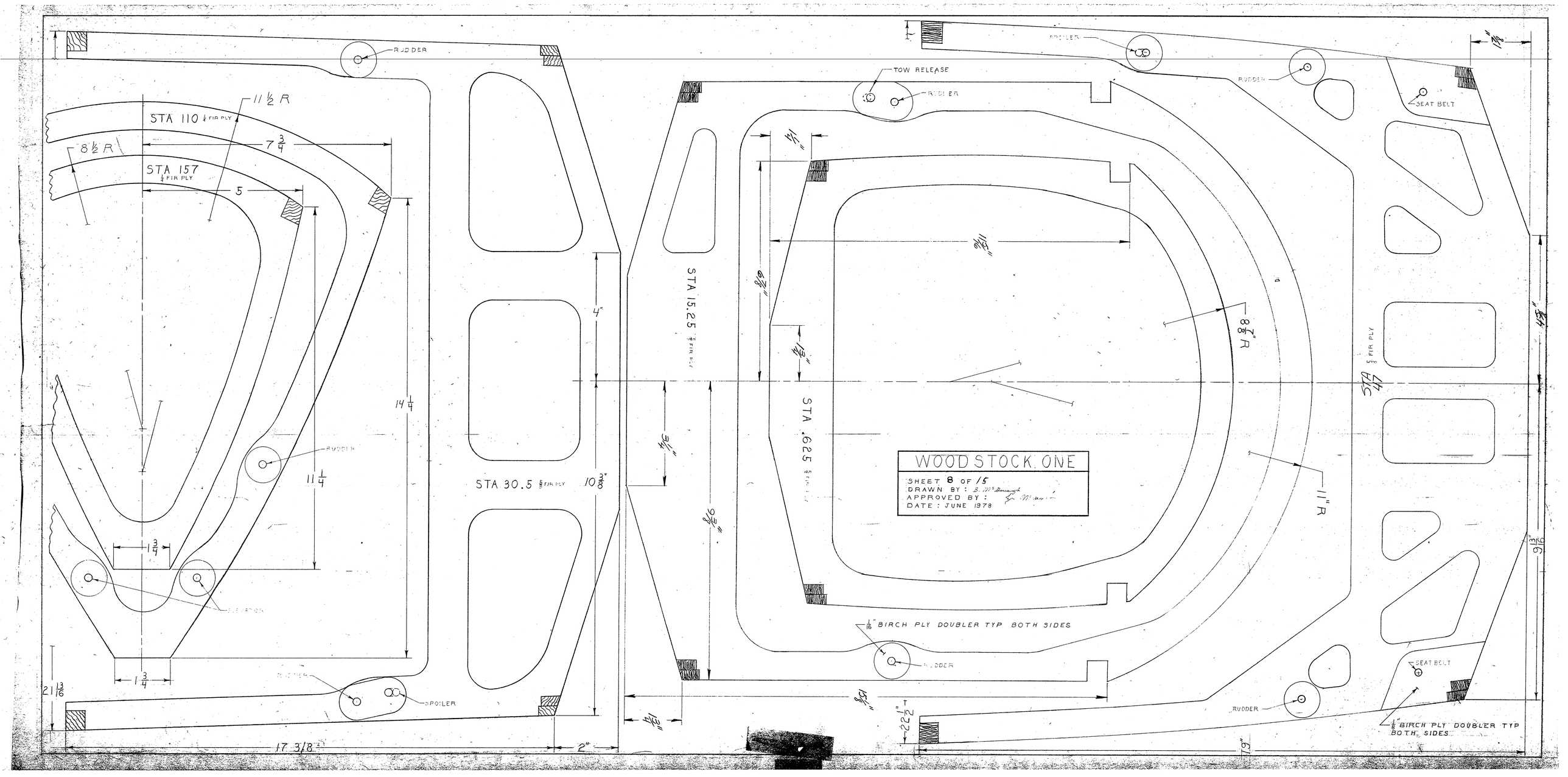
WOOD STOCK ONE
SHEET 8 OF 15
DRAWN BY : B. W. Barnaugh
APPROVED BY :
DATE : JUNE 1978
STA 110 1/4 FIR PLY
STA 157 1/4 FIR PLY
STA 30.5 1/8 FIR PLY
STA 15.25 1/8 FIR PLY
STA .625 1/8 FIR PLY
STA 47 1/8 FIR PLY
11 1/2 R
8 1/2 R
7 3/4
5
14 1/4
11 1/4
1 3/4
21 13/16
17 3/8
2"
10 3/8
4"
3 1/2"
9 3/8"
6 7/8"
13"
1 1/2"
9 11/16"
15 5/8"
22 1/2"
8 7/8" R
11" R
9 13/16"
43 3/8"
1 1/2"
79"
RUDDER
TOW RELEASE
SPOILER
SEAT BELT
1/16" BIRCH PLY DOUBLER TYP BOTH SIDES
1/8" BIRCH PLY DOUBLER TYP BOTH SIDES

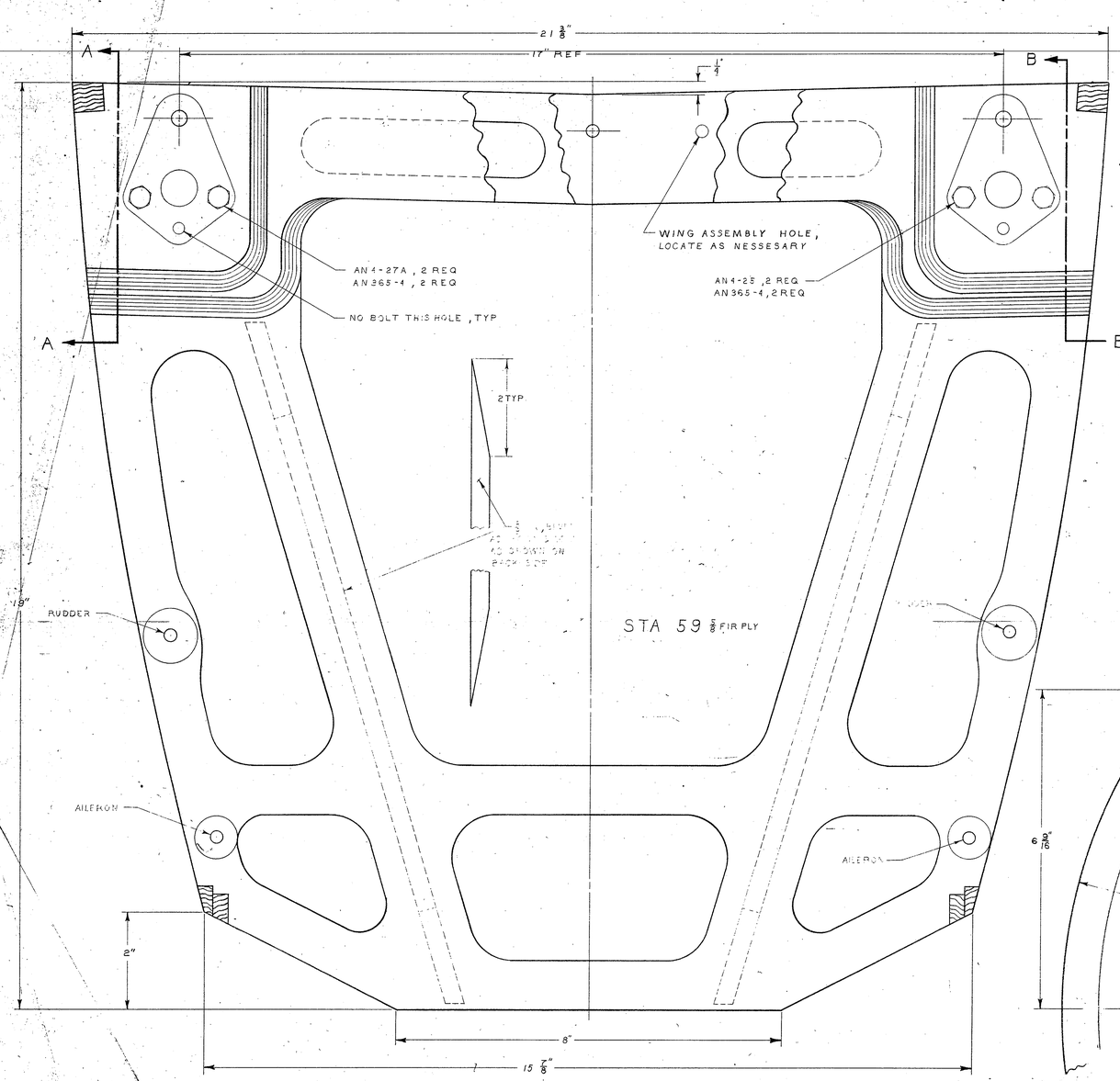

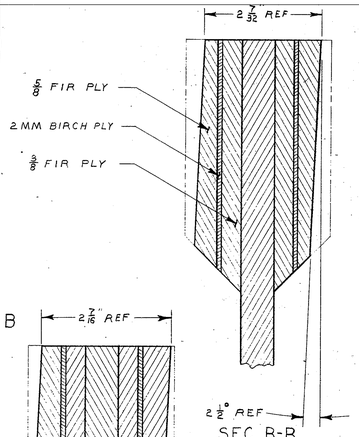

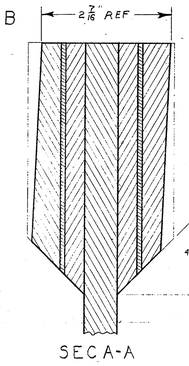

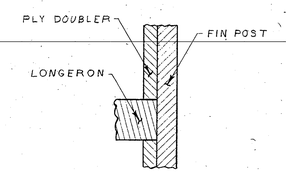

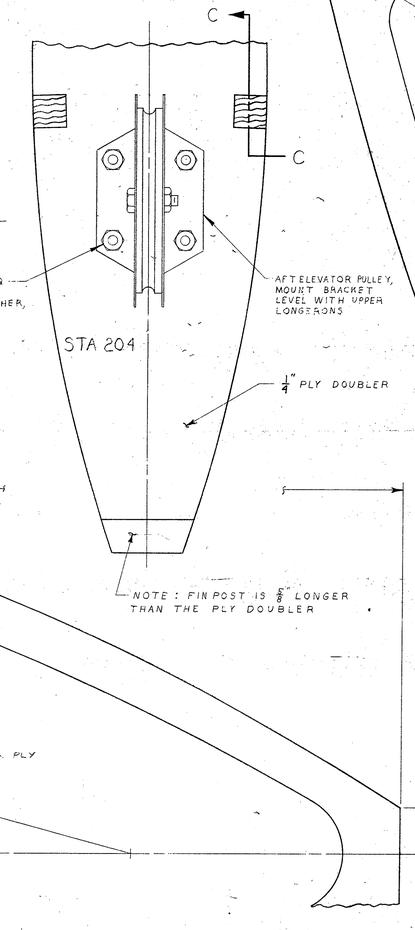

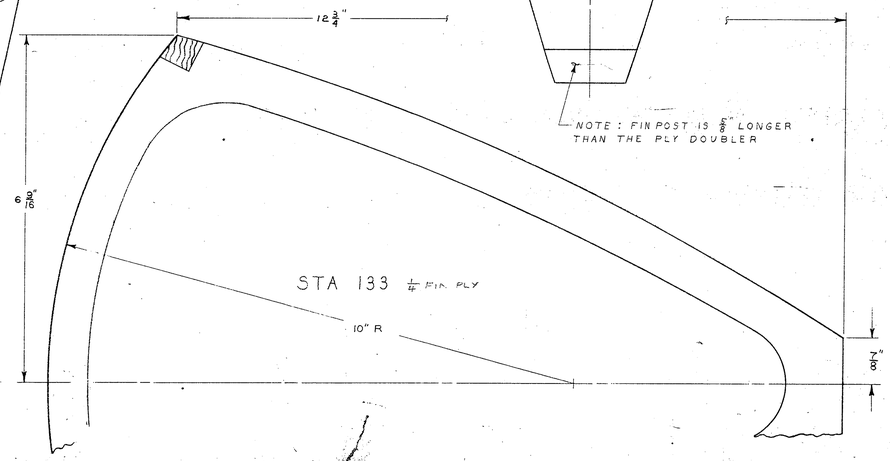

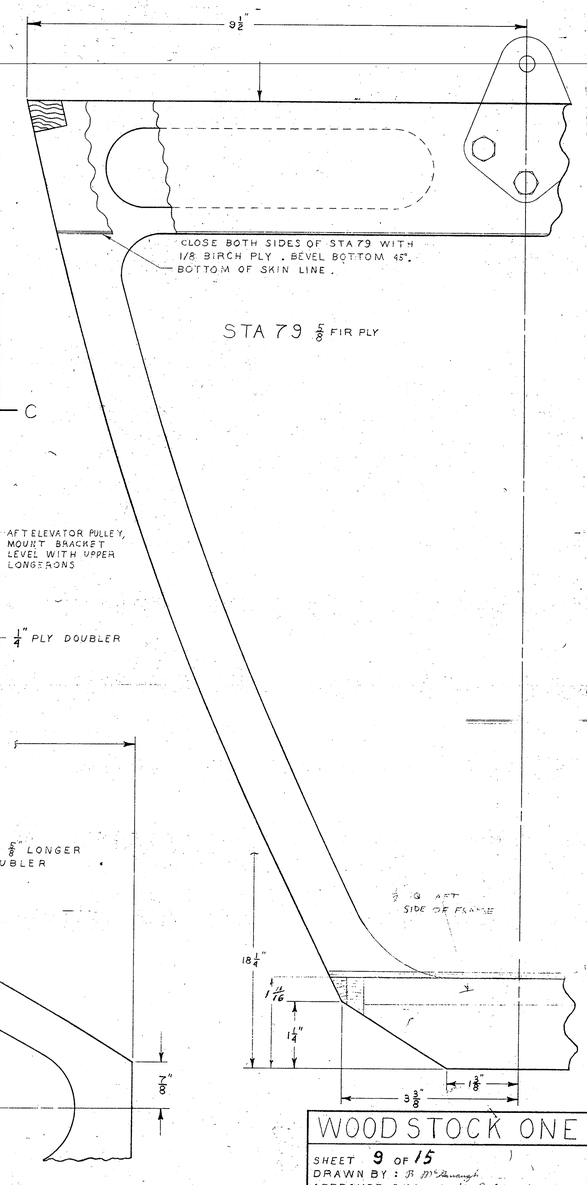

WOOD STOCK ONE

SHEET 9 OF 15
DRAWN BY : R McLaughlin
APPROVED BY : L Mauger
DATE : JULY 1978

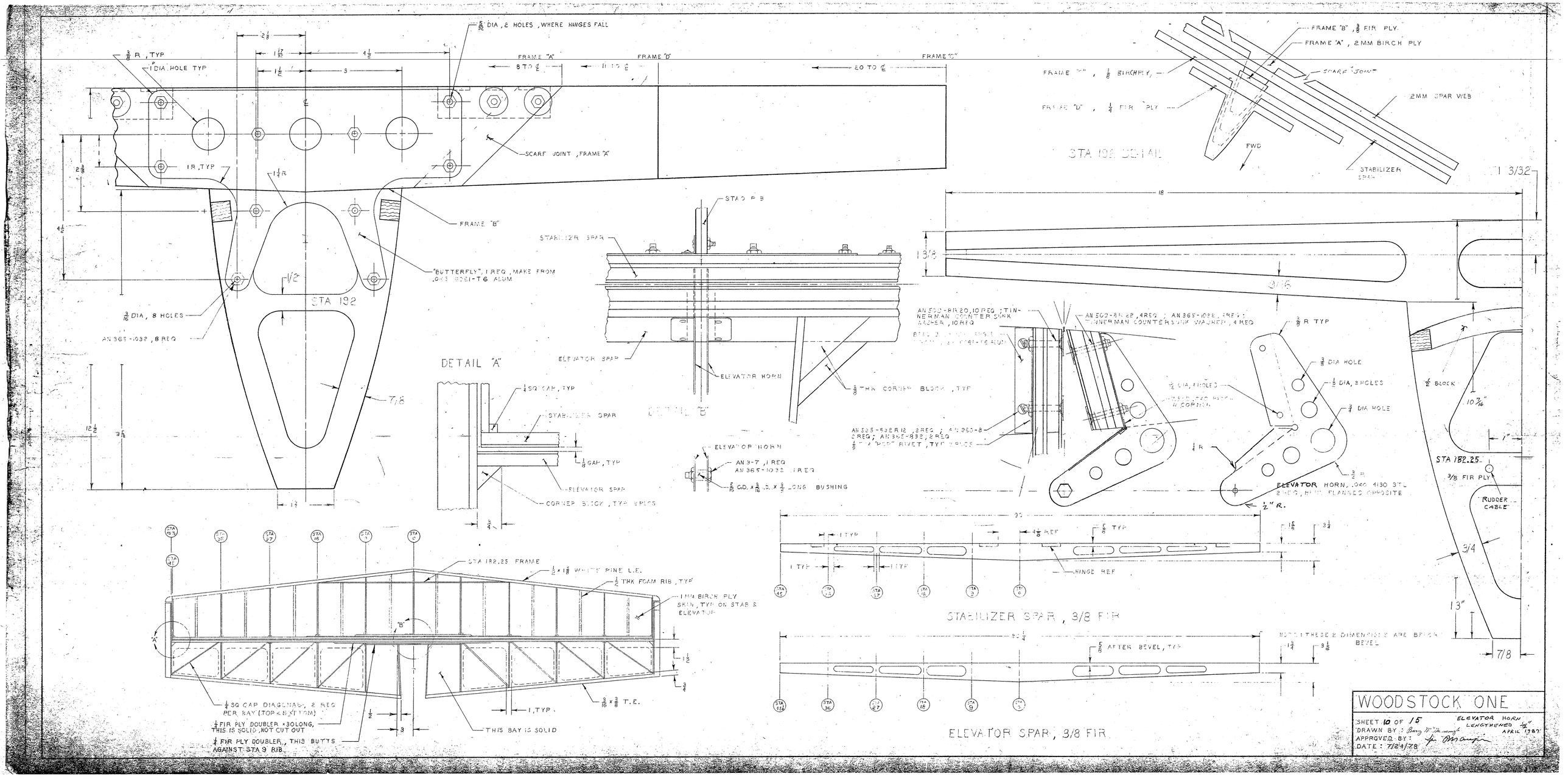

WOODSTOCK ONE

SHEET 10 OF 15

ELEVATOR HORN LENGTHENED 1/2" APRIL 1987

DRAWN BY: Barry Wainwright

APPROVED BY: [illegible]

DATE: 7/24/78

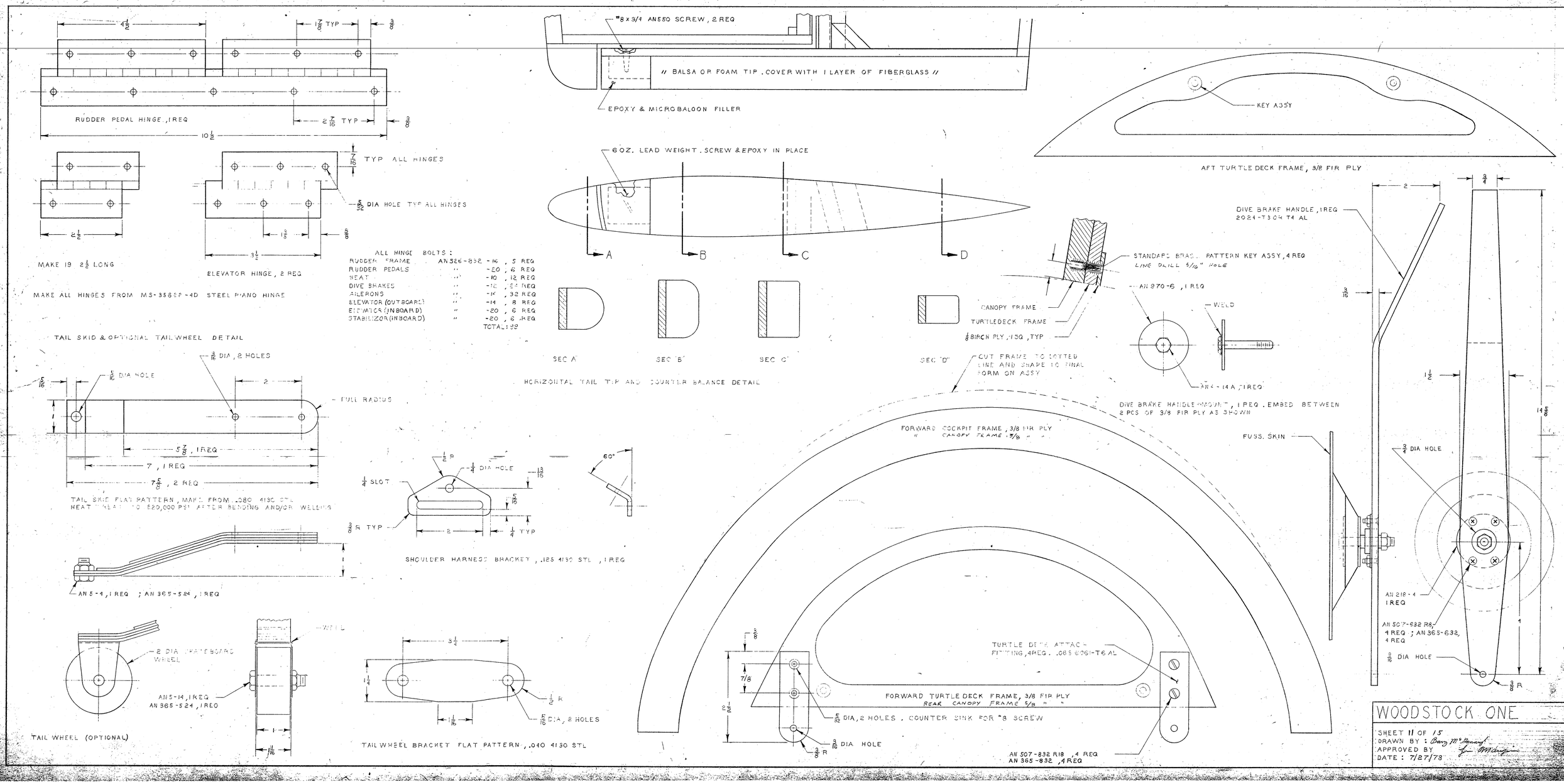
RUDDER PEDAL HINGE, 1 REQ
TYP ALL HINGES
5/32 DIA HOLE TYP ALL HINGES
MAKE 19 2 1/2 LONG
ELEVATOR HINGE, 2 REQ
MAKE ALL HINGES FROM MS-35689-4D STEEL PIANO HINGE
ALL HINGE BOLTS:
RUDDER FRAME AN 526-832-16, 5 REQ
RUDDER PEDALS " -20, 6 REQ
SEAT " -10, 12 REQ
DIVE BRAKES " -12, 52 REQ
AILERONS " -14, 32 REQ
ELEVATOR (OUTBOARD) " -14, 8 REQ
ELEVATOR (INBOARD) " -20, 6 REQ
STABILIZOR (INBOARD) " -20, 6 REQ
TOTAL: 99
#8 x 3/4 AN550 SCREW, 2 REQ
// BALSA OR FOAM TIP. COVER WITH 1 LAYER OF FIBERGLASS //
EPOXY & MICROBALOON FILLER
6 OZ. LEAD WEIGHT. SCREW & EPOXY IN PLACE
A
B
C
D
SEC 'A'
SEC 'B'
SEC 'C'
SEC 'D'
HORIZONTAL TAIL TIP AND COUNTER BALANCE DETAIL
KEY ASSY
AFT TURTLE DECK FRAME, 3/8 FIR PLY
STANDARD BRASS PATTERN KEY ASSY, 4 REQ
LINE DRILL 5/16" HOLE
AN 970-6, 1 REQ
WELD
CANOPY FRAME
TURTLEDECK FRAME
1/8 BIRCH PLY, 150, TYP
AN 4-14A, 1 REQ
DIVE BRAKE HANDLE-MOUNT, 1 REQ. EMBED BETWEEN 2 PCS OF 3/8 FIR PLY AS SHOWN
DIVE BRAKE HANDLE, 1 REQ 2024-T304 T4 AL
TAIL SKID & OPTIONAL TAILWHEEL DETAIL
3/16 DIA, 2 HOLES
5/16 DIA HOLE
FULL RADIUS
5 7/8, 1 REQ
7, 1 REQ
7 5/8, 2 REQ
TAIL SKID FLAT PATTERN, MADE FROM .080 4130 STL
HEAT TREAT TO 220,000 PSI AFTER BENDING AND/OR WELDING
AN 5-4, 1 REQ ; AN 365-524, 1 REQ
1/4 SLOT
1/2 R
1/4 DIA HOLE
60°
1/8 R TYP
1/4 TYP
SHOULDER HARNESS BRACKET, .125 4130 STL, 1 REQ
FORWARD COCKPIT FRAME, 3/8 FIR PLY
" CANOPY FRAME 3/8 " "
FUSS. SKIN
3/4 DIA HOLE
AN 218-4 1 REQ
AN 507-632 R8, 4 REQ ; AN 365-632, 4 REQ
3/8 DIA HOLE
3/8 R
TURTLE DECK ATTACH FITTING, 4 REQ. .085 6061-T6 AL
FORWARD TURTLE DECK FRAME, 3/8 FIR PLY
REAR CANOPY FRAME 5/8 " "
5/32 DIA, 2 HOLES. COUNTER SINK FOR #8 SCREW
3/16 DIA HOLE
3/8 R
AN 507-832 R18, 4 REQ
AN 365-832, 4 REQ
2 DIA SKATEBOARD WHEEL
WELD
AN 5-14, 1 REQ
AN 365-524, 1 REQ
TAIL WHEEL (OPTIONAL)
1/2 R
5/16 DIA, 2 HOLES
TAIL WHEEL BRACKET FLAT PATTERN, .040 4130 STL
WOODSTOCK ONE
SHEET 11 OF 15
DRAWN BY: Barry McDonald
APPROVED BY
DATE: 7/27/78

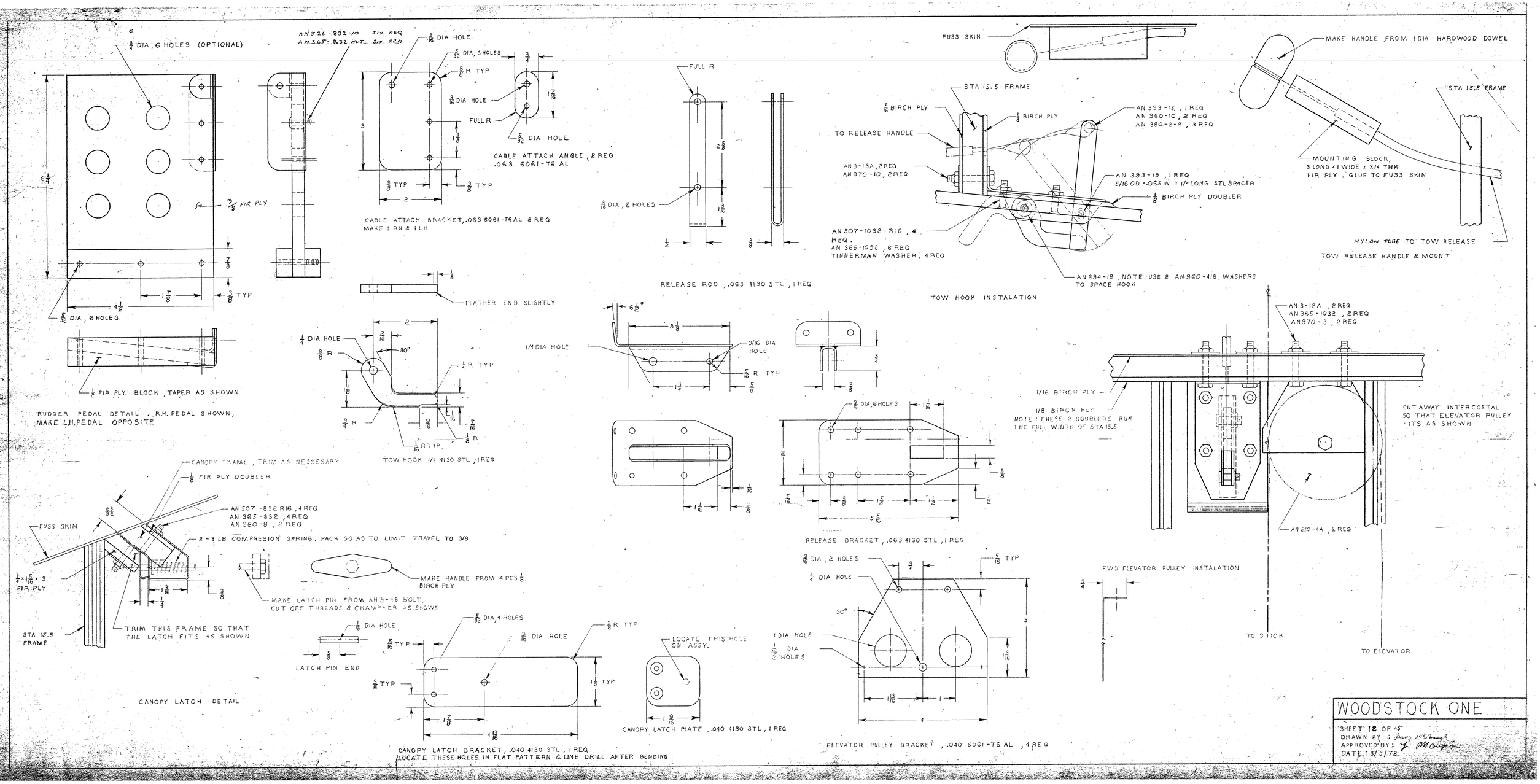

WOODSTOCK ONE

SHEET 12 OF 15
DRAWN BY: Jerry Mc Tarnagh
APPROVED BY: L. M. Cooper
DATE: 8/3/78

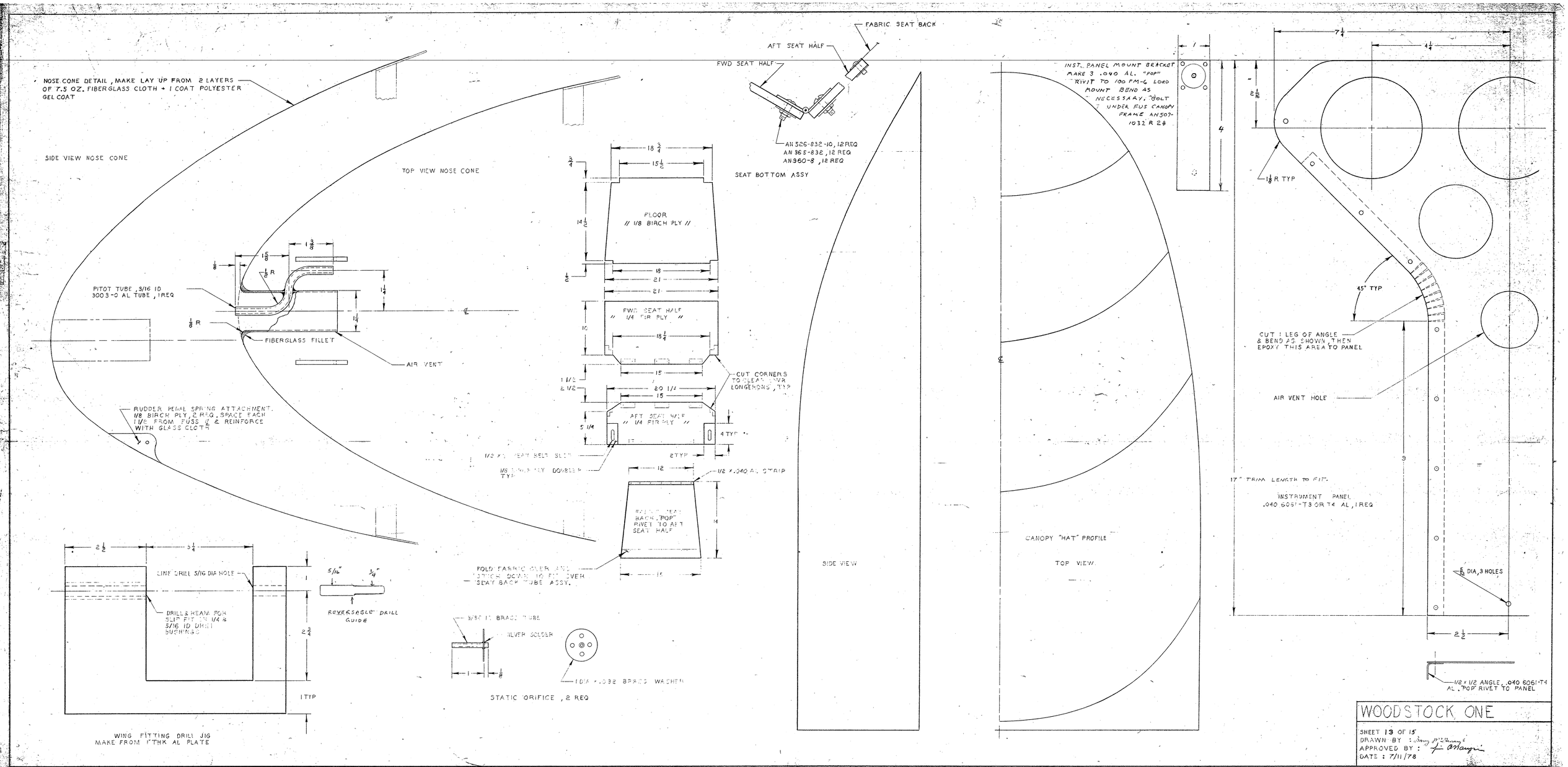

WOODSTOCK, ONE

SHEET 13 OF 15
DRAWN BY : Larry McSweeney
APPROVED BY : F. Mangin
DATE : 7/11/78

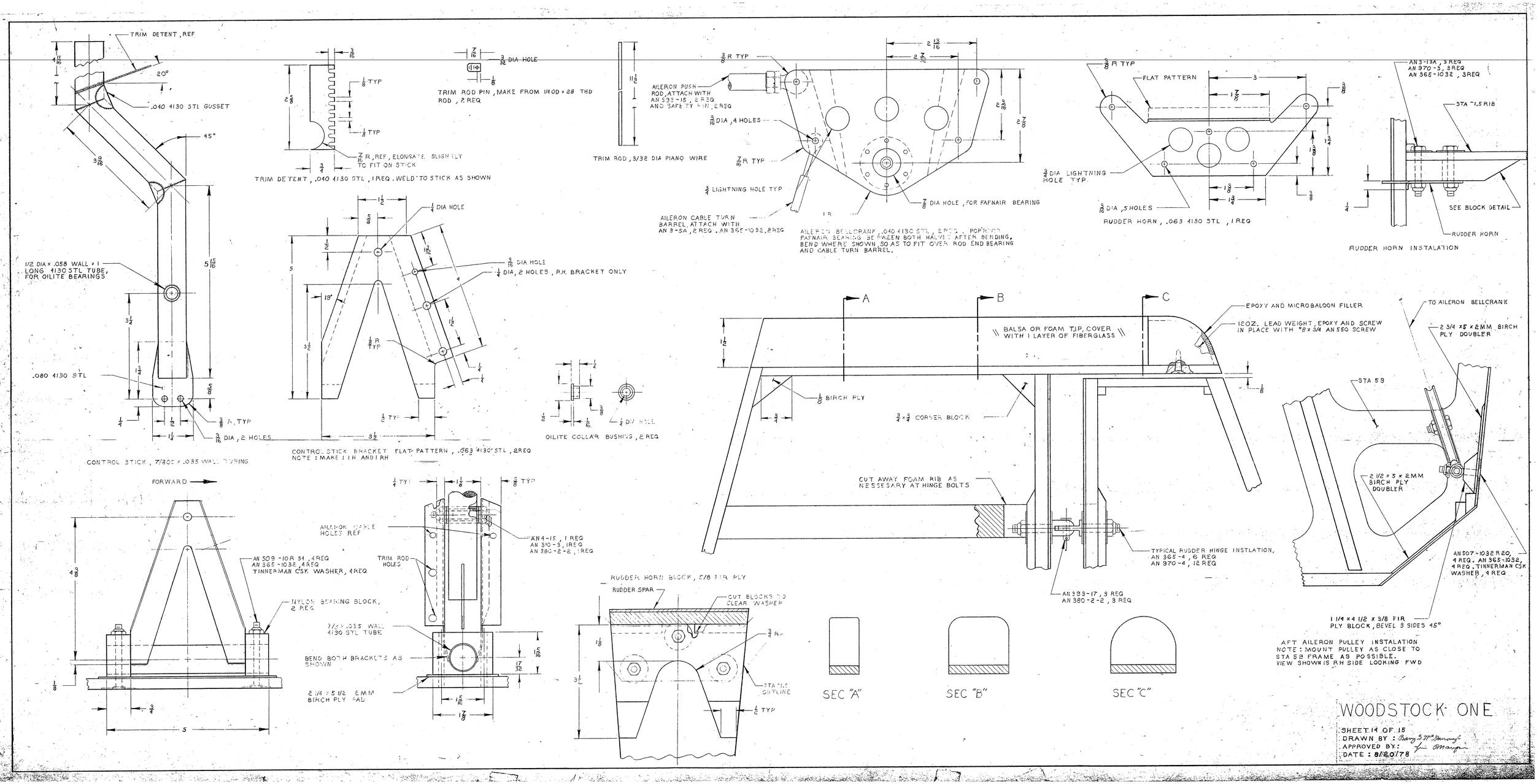

WOODSTOCK ONE

SHEET 14 OF 15
DRAWN BY: Barry S. McDonough
APPROVED BY: Jim Morgan
DATE: 8/20/78

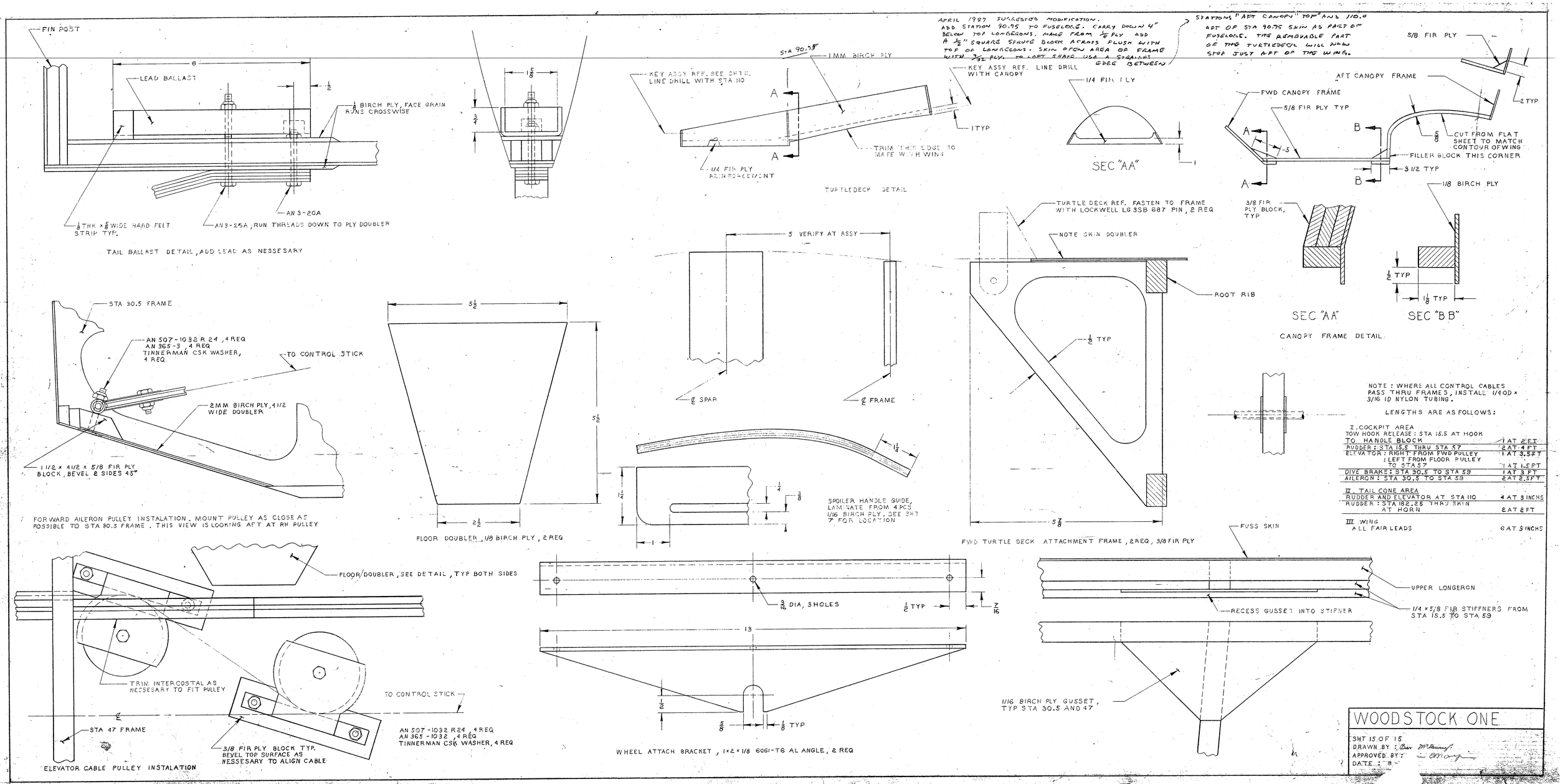
FIN POST
LEAD BALLAST
1/8 BIRCH PLY, FACE GRAIN RUNS CROSSWISE
1/8 THK x 5/8 WIDE HARD FELT STRIP TYP.
AN 3-20A
AN 3-26A, RUN THREADS DOWN TO PLY DOUBLER
TAIL BALLAST DETAIL, ADD LEAD AS NESSESARY
APRIL 1987 SUGGESTED MODIFICATION. ADD STATION 90.75 TO FUSELOGE. CARRY DOWN 4" BELOW TOP LONGERONS. MAKE FROM 1/8 PLY ADD A 1/2" SQUARE SPRUCE BLOCK ACROSS FLUSH WITH TOP OF LONGERONS. SKIN PTON AREA OF FRAME WITH 3/32 PLY. TO LOFT SHAPE USE A STRAIGHT EDGE BETWEEN STATIONS "AFT CANOPY TOP" AND 110.0
AFT OF STA 90.75 SKIN AS PART OF FUSELOGE. THE REMOVABLE PART OF THE TURTLEDECK WILL NOW STOP JUST AFT OF THE WING.
STA 90.75
1MM BIRCH PLY
KEY ASSY REF. SEE DRTG. LINE DRILL WITH STA 110
KEY ASSY REF. LINE DRILL WITH CANOPY
1TYP
TRIM THIS EDGE TO MATE WITH WING
1/4 FIR PLY REINFORCEMENT
TURTLEDECK DETAIL
1/4 FIR PLY
SEC "AA"
5/8 FIR PLY
AFT CANOPY FRAME
FWD CANOPY FRAME
5/8 FIR PLY TYP
2 TYP
CUT FROM FLAT SHEET TO MATCH CONTOUR OF WING
FILLER BLOCK THIS CORNER
3 1/2 TYP
1/8 BIRCH PLY
3/8 FIR PLY BLOCK, TYP
SEC "AA"
SEC "B B"
CANOPY FRAME DETAIL
TURTLE DECK REF. FASTEN TO FRAME WITH LOCKWELL LG 3SB 887 PIN, 2 REQ
NOTE SKIN DOUBLER
ROOT RIB
5 VERIFY AT ASSY
℄ SPAR
℄ FRAME
STA 30.5 FRAME
AN 507-1032 R 24, 4 REQ
AN 365-3, 4 REQ
TINNERMAN CSK WASHER, 4 REQ
TO CONTROL STICK
2MM BIRCH PLY, 4 1/2 WIDE DOUBLER
1 1/2 x 4 1/2 x 5/8 FIR PLY BLOCK, BEVEL 2 SIDES 45°
FORWARD AILERON PULLEY INSTALATION. MOUNT PULLEY AS CLOSE AS POSSIBLE TO STA 30.5 FRAME. THIS VIEW IS LOOKING AFT AT RH PULLEY
FLOOR DOUBLER, 1/8 BIRCH PLY, 2 REQ
SPOILER HANDLE GUIDE, LAMINATE FROM 4 PCS 1/16 BIRCH PLY. SEE DRT 7 FOR LOCATION
FWD TURTLE DECK ATTACHMENT FRAME, 2 REQ, 3/8 FIR PLY
NOTE: WHERE ALL CONTROL CABLES PASS THRU FRAMES, INSTALL 1/4 OD x 3/16 ID NYLON TUBING.
LENGTHS ARE AS FOLLOWS:
I. COCKPIT AREA
TOW HOOK RELEASE: STA 15.5 AT HOOK TO HANDLE BLOCK — 1 AT 2 FT
RUDDER: STA 15.5 THRU STA 57 — 2 AT 4 FT
ELEVATOR: RIGHT FROM FWD PULLEY — 1 AT 3.5 FT
: LEFT FROM FLOOR PULLEY TO STA 57 — 1 AT 1.5 FT
DIVE BRAKE: STA 30.5 TO STA 59 — 1 AT 3 FT
AILERON: STA 30.5 TO STA 59 — 2 AT 2.5 FT
II. TAIL CONE AREA
RUDDER AND ELEVATOR AT STA 110 — 4 AT 3 INCHS
RUDDER: STA 182.25 THRU SKIN AT HORN — 2 AT 2 FT
III WING
ALL FAIR LEADS — 6 AT 3 INCHS
FLOOR DOUBLER, TYP BOTH SIDES
TRIM INTERCOSTAL AS NESSESARY TO FIT PULLEY
TO CONTROL STICK
STA 47 FRAME
3/8 FIR PLY BLOCK TYP. BEVEL TOP SURFACE AS NESSESARY TO ALIGN CABLE
AN 507-1032 R24, 4 REQ
AN 365-1032, 4 REQ
TINNERMAN CSK WASHER, 4 REQ
ELEVATOR CABLE PULLEY INSTALATION
3/16 DIA, 3 HOLES
1/2 TYP
7/16
1/8 TYP
WHEEL ATTACH BRACKET, 1x2x1/8 6061-T6 AL ANGLE, 2 REQ
FUSS SKIN
UPPER LONGERON
RECESS GUSSET INTO STIFNER
1/4 x 5/8 FIR STIFFNERS FROM STA 15.5 TO STA 59
1/16 BIRCH PLY GUSSET, TYP STA 30.5 AND 47
WOODSTOCK ONE
SHT 15 OF 15
DRAWN BY:
APPROVED BY:
DATE: